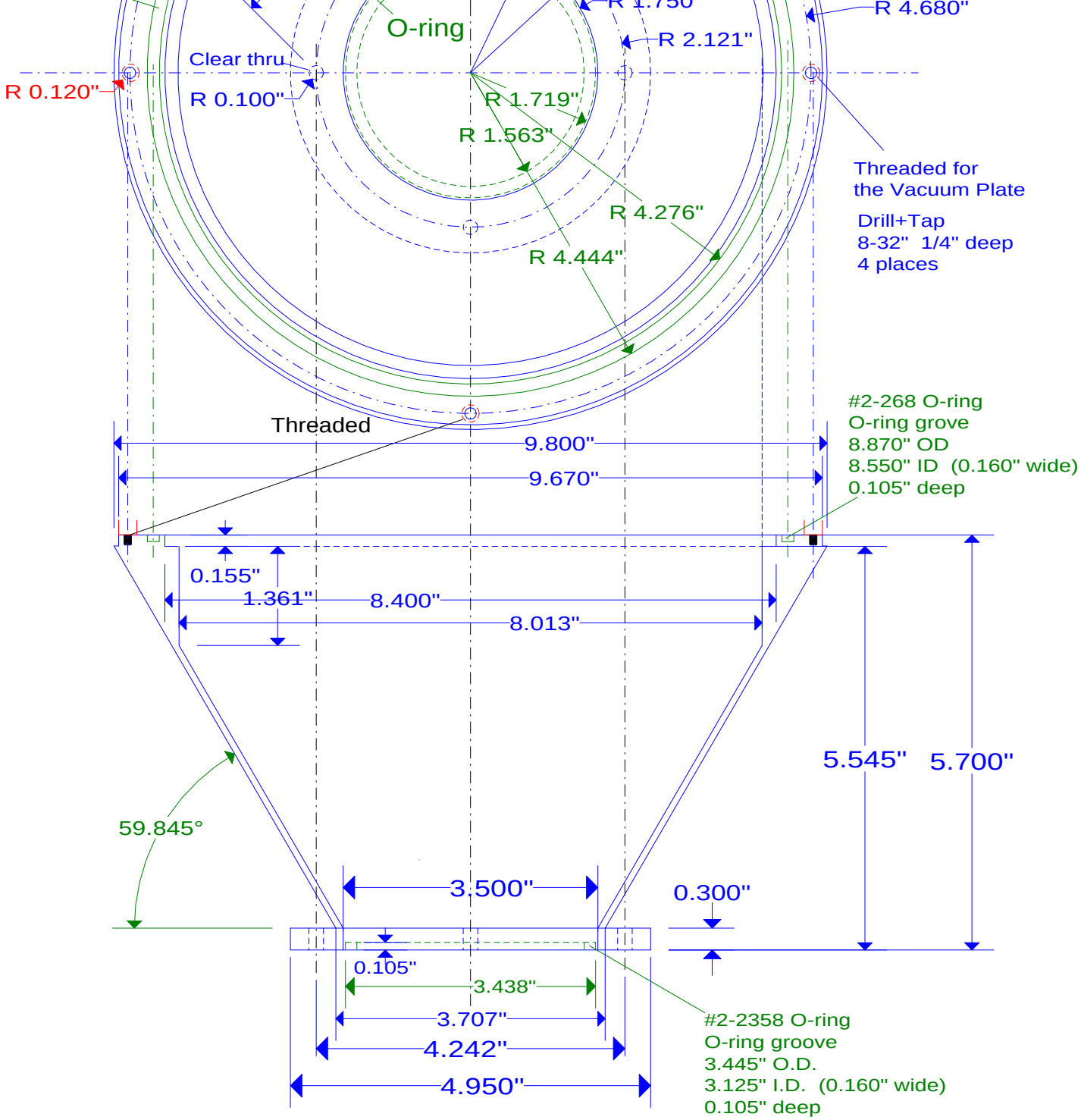
O-ring
R 1.750
R 4.680"
R 2.121"
Clear thru
R 0.120"
R 0.100"
R 1.719"
R 1.563"
R 4.276"
R 4.444"
Threaded for
the Vacuum Plate
Drill+Tap
8-32" 1/4" deep
4 places
Threaded
#2-268 O-ring
O-ring grove
8.870" OD
8.550" ID (0.160" wide)
0.105" deep
9.800"
9.670"
0.155"
1.361"
8.400"
8.013"
5.545"
5.700"
59.845°
3.500"
0.300"
0.105"
3.438"
3.707"
4.242"
4.950"
#2-2358 O-ring
O-ring groove
3.445" O.D.
3.125" I.D. (0.160" wide)
0.105" deep
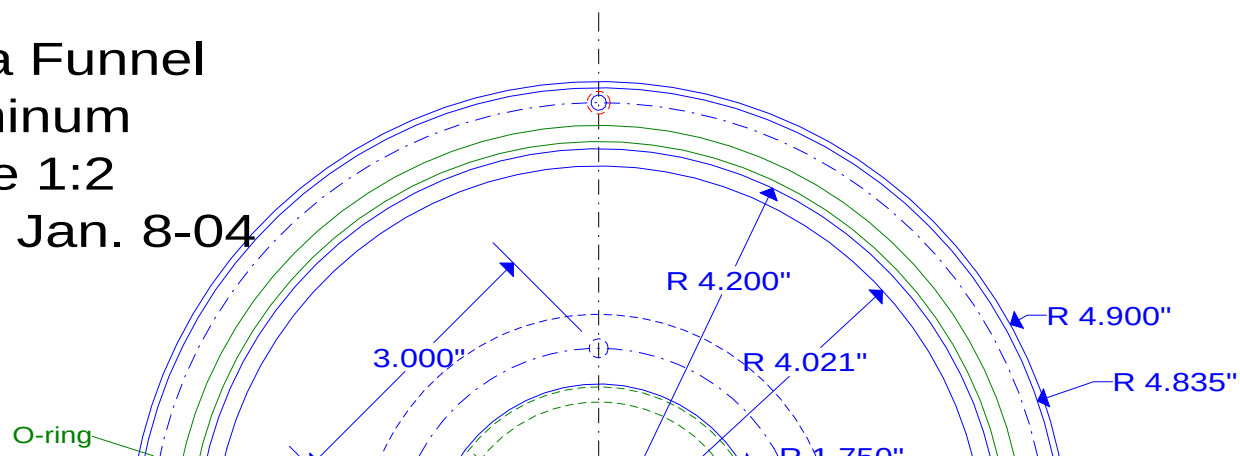
Lucia Funnel
Aluminum
Scale 1:2
DGS Jan. 8-04